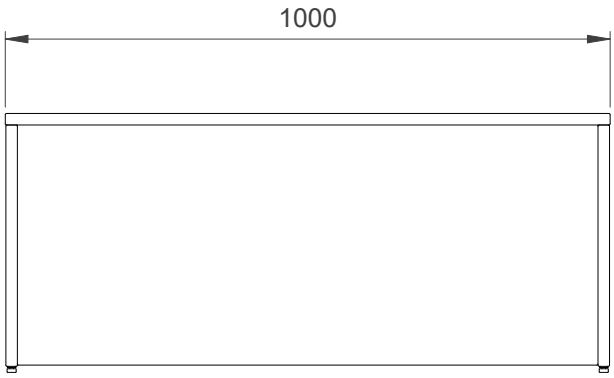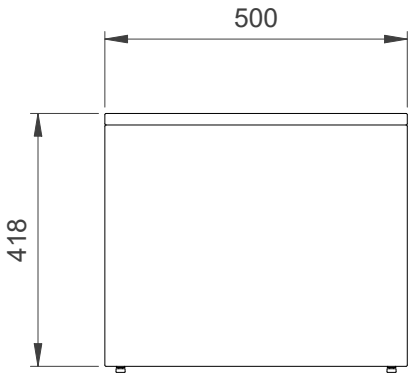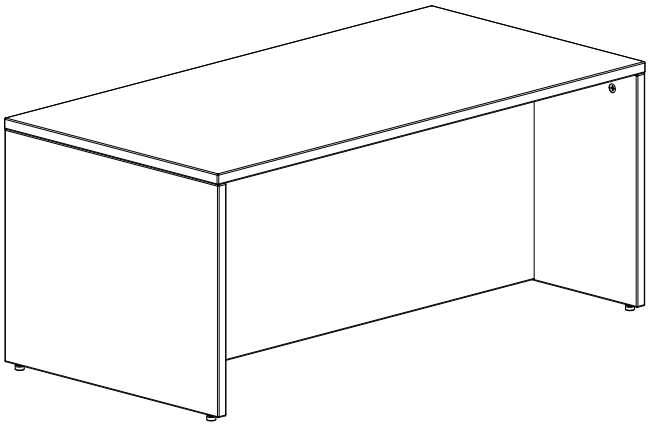Elsa Bench